VH-MP3
INSTRUCTION BOOKLET

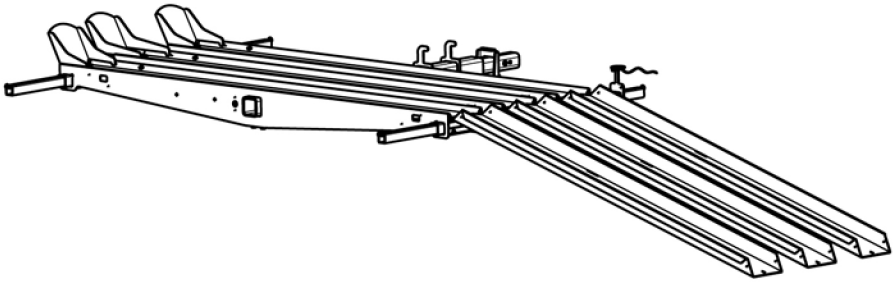

Parts

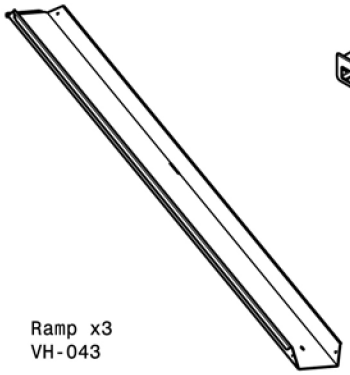

Ramp x3
VH-043

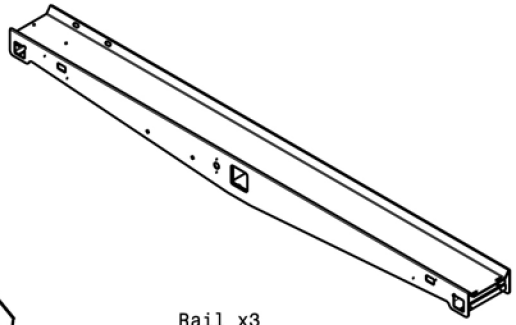

Rail x3
VH-010

Extended Wheel Stop x1
VH-050D

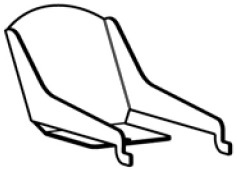

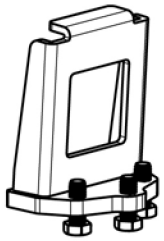

Anti-tilt
Bracket x1
VH-072 HD

Wheel Stop x 2
VH-050

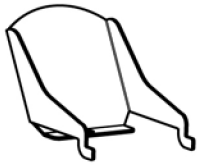

Long Tube x2
VH-037

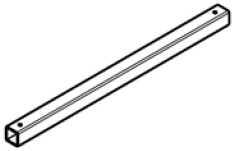

Snap Pin x4
VH-200

Tie Down Tube x4
VH-031

Single Tab Ramp Bracket Extended x1
with Snap Collar Pin x1
VH-061 TR

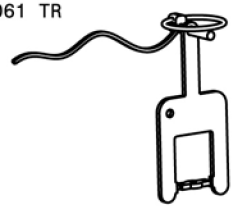

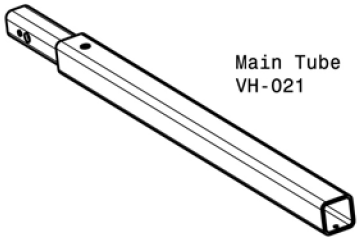

Main Tube
VH-021

Double Tab Ramp Bracket x1
VH-060 TR

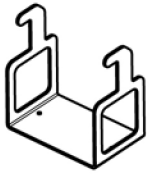

x12 Main Tube Lock Bolts
3/8" x 1 1/4" bolts
VH-230

x3 Wheel Stop Bolts
5/16" x 3/4" bolts
VH-220

x15 Tie Down Bolts
1/4" x 3/4" Bolts
VH-210

x1 5/16" Nuts
for Adjustable Bolts
VH-223

x4 5/16" Washer
for 5/16" bolts
VH-225

x4 5/16" Lock Washer
for 5/16" bolt
VH-222

x1 Main Tube Safety Bolt
5/16" x 1/2" Bolt
VH-221

STEP 1

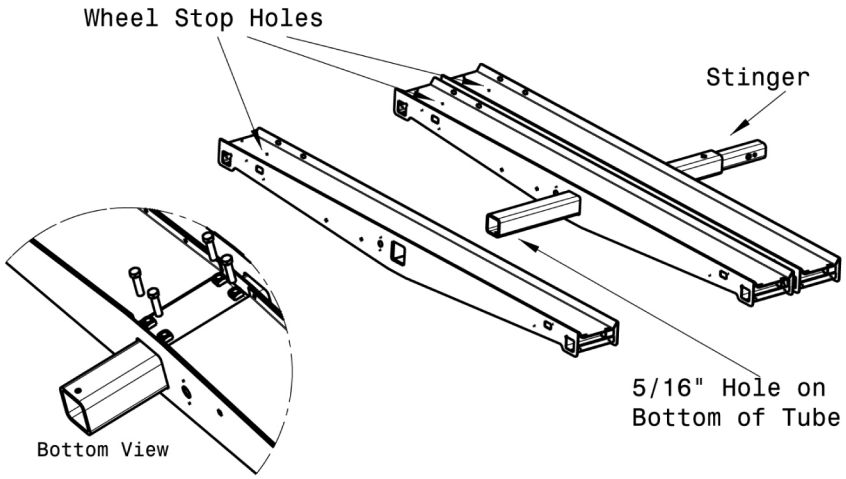

Insert the Main Tube into the VH-55 Main Rails and secure with the x4 3/8" x 1 1/4" Bolts on the bottom of each Rail. The bolts are to be tightened up against the bottom of the main tube. Be sure the holes for the wheel stops are all located on the same side of the carrier and the 5/16" hole in the end of the Main Tube is on the bottom to ensure proper assembly.

STEP 2

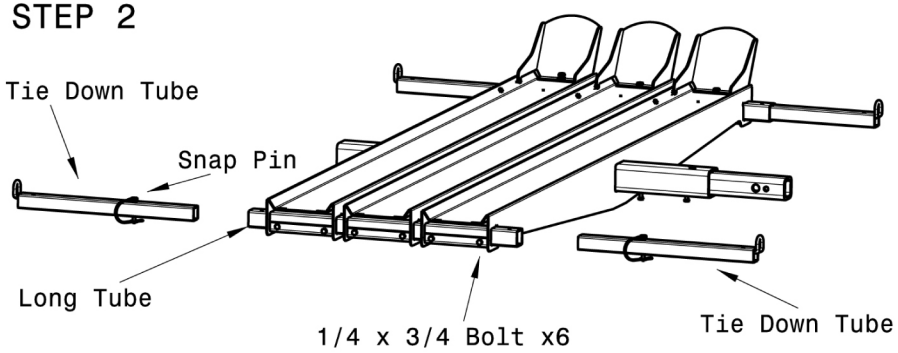

Insert Long Tube through all three VH-55 Main Rails. Tighten 1/4" x 3/4" bolts againts the Long Tube to hold in place. Insert Tie Down Tubes on either side of Long Tube as shown and attach using Snap Pin. Repeat process on other side of carrier.

STEP 3

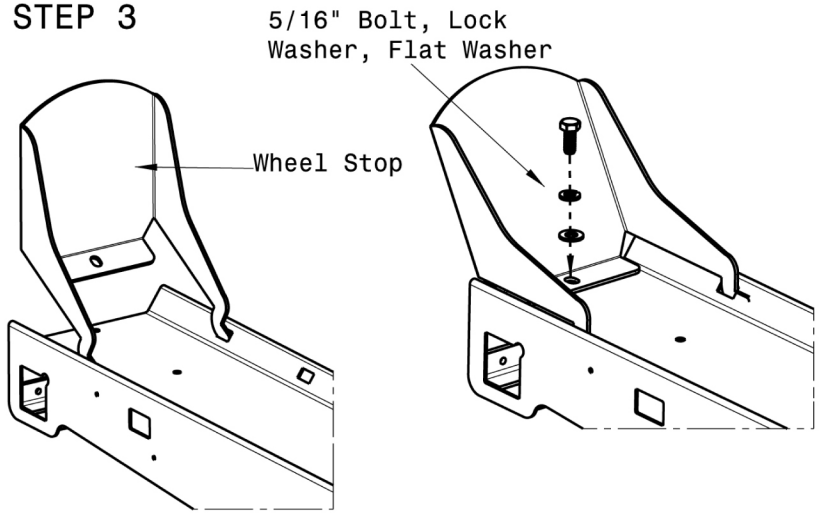

Insert the two tabs on the Wheel Stop into the slots on the top of the VH-55 Rail. Fasten it to the rail with the 5/16" Bolt, Lock Washer, and Flat Washer in that order. Repeat on each rail.

STEP 4

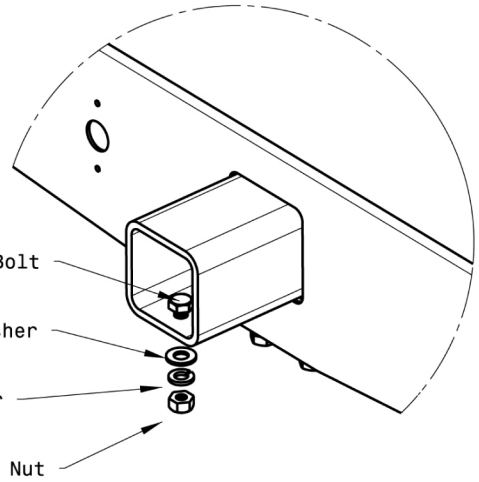

As a final precaution, install the 5/16" x 1/2" Bolt in the hole at the end of the tube and securing with the Flat Washer, Lock Washer, and Nut.

STEP 5

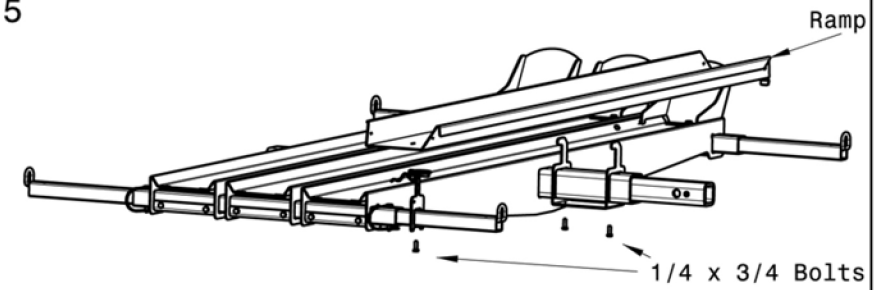

Slide Double Tab Ramp Bracket on Main Tube and Single Tab Ramp Bracket on Tie Down Tube. Attach each using the 1/4 x 3/4 bolts. To store ramps remove snap pin and stack ramps on the Ramp Brackets then replace snap pin.

STEP 6

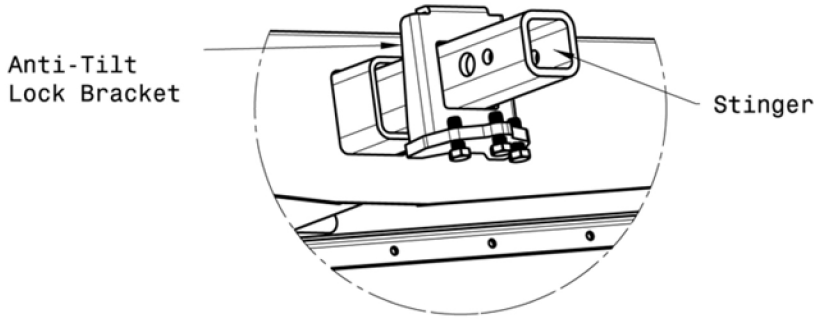

To attach your assembled Versahaul to your vehicle, first slip the Anti-tilt Bracket over the stinger as shown, making sure the bolts are toward the vehicle. Insert the stinger into the receiver and secure it with a hitch pin. Tighten all three 3/8" x 1 1/4" hex head bolts on the Anti-tilt Bracket against the bottom of the receiver using a 9/16" wrench.

STEP 7

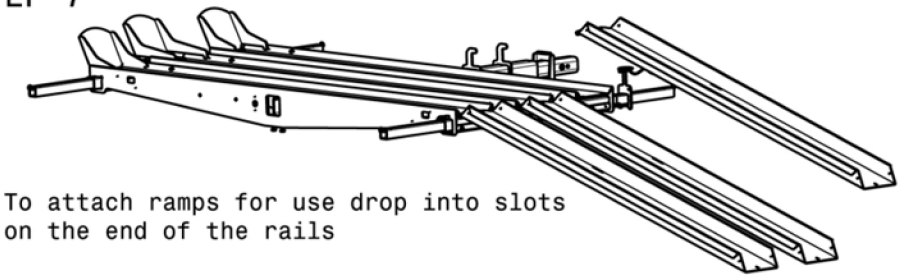

To attach ramps for use drop into slots on the end of the rails

Warning

A warning indicates a potentially hazardous situation which, if not avoided, could result in death or serious injury.

1. Read all instructions and save them for later reference.
2. Follow all warnings and instructions marked on the product.
3. Do not stand on the Versa-Haul.
4. Do not ride any vehicle during loading.
5. Store Versa-Haul carrier in a safe place.
6. Do not exceed vehicle tongue weight rating.
7. Only use with class III hitch. Most class III hitches limit Versa-Haul to 500 lbs. total hauling capacity.
8. Improper use of carrier could result in death or serious injury.
9. Do not put Versahaul onto a 5th wheel trailer or any other kind of trailer.
10. **VH-AM carrying capacity is limited to 600 lbs max (500 lbs/rail). Your vehicle suspension and hitch may limit the hauling capacity of the carrier.** For more information on vehicles and hauling capacities, visit www.versahaul.com

Manufacturer Information

Manufacturer's Name: BNK, Inc.

Manufacturer's Address:
BNK, Inc.
9341 S. St. Rd. 39
Winamac, IN 46996
(888) 818-9915

Product Name: Versa-Haul
Product Description: Versa-Haul 3 Ramp Carrier
Model Number(s): VH-MP3
Patent Number: D551420

Serial number _____
(please fill in serial number affixed to Versa-Haul)

Anti-Tilt Bracket Installation Guide

P/N: VH072

STEP 1

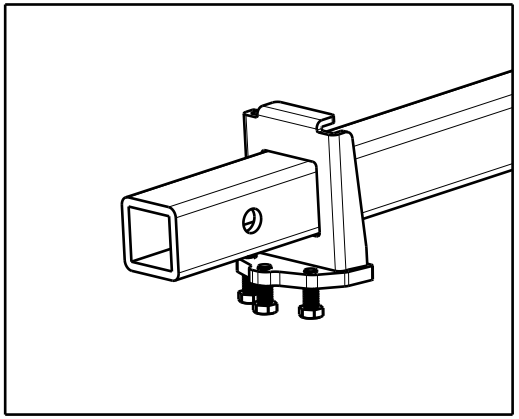

Mount the three 3/8" bolts to the bracket. Insert bracket to the main tube as shown in figure above.

STEP 2

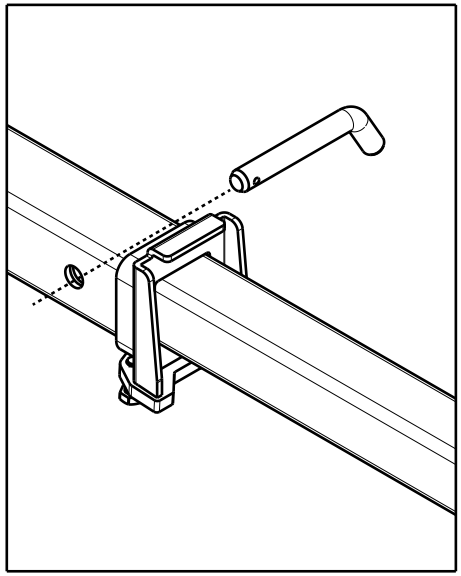

Insert main tube to vehicle's receiver hitch and install hitch pin (not included).

STEP 3

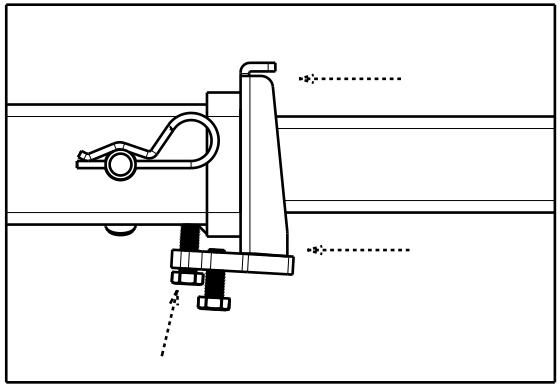

Position the anti-tilt bracket such that it sits flush against the hitch collar. Tighten center bolt until it fits snugly against the receiver hitch underside. Due to variation between hitches, the center bolt might land on the weldment or collar edge.

STEP 4

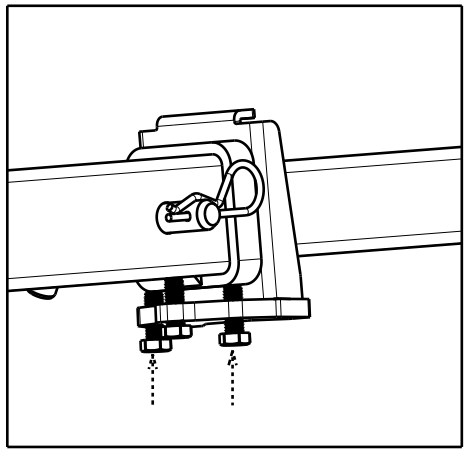

Tighten the two side bolts; then re-tighten the center bolt. Make sure the bolts are tight enough such that no slack exist between the main tube and the hitch. Test by rocking the carrier from the sides. Road vibration may cause bolts to loosen over time. Check the bolts periodically.

NOTE: It is normal for some deformation to occur on the contact area between the main tube and the anti-tilt bracket.

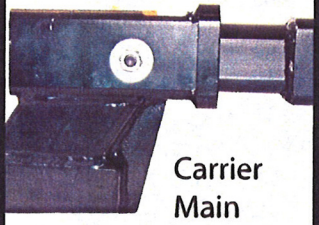

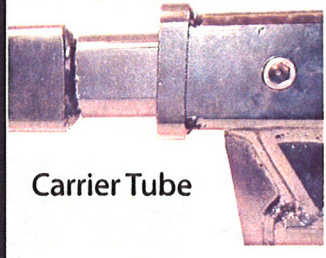

If the Anti-Tilt Lock Bracket does not fit, there is an alternative. Use the Anti-Tilt Hitch Attachment Bolt. The Anti-Tilt Hitch Attachment Bolt has a 7/18" thread size, a 3/8" Allen head size, and a 5/8" outer head size. Follow these instructions: Slide the Main Tube of the carrier into the hitch receiver. Secure the Main Tube to the receiver with the Anti-Tilt Bolt, Washer, and Nut as shown in the image. The Bolt must be inserted into the 7/16" hole, not the 5/8" hole. **Note: Do not put a washer at the bolt head.** The bolt head should be recessed into the receiver hole and putting pressure on the Main Tube of the Carrier inside the receiver.

Anti-Tilt Lock Bracket (Alternative) Instructions